Item No.	Part No.	Description	Qty.	
1	638001	Housing Assy.	1	
2	359005	Screw, 6–32 x 1/4 Bind Head SST.	4	
3	602029F	Special Rivet	1	C
4	600007	Skid	1	
5	609048	Screw, 4–40 x 3/8 Flat Head SST.	1	
6	609008	Screw, 4–40 x 1/2 Flat Head SST.	1	
7	630009	Facing	1	
8	604036	Blade Clamp Assy.	1	
9	600005F	Blade	1	C
10	609049	Nut, 8–32 Hex Flanged	4	B
11	059074	Nut, 8–32 Hex. SST.	1	
12	602035	Adjustable Stop	1	
13	639020	Plastic Washer	1	
14	630015	Wiper (Viton)	1	
15	709050	Ext.Tooth Lockwasher, No. 10.(Service Only)	1	C
16	634028	Pressure Plate Assembly	1	
17	609018	Plastic Washer	2	
18	602045F	Special Washer	1	C
19	059225	Nut, 10–32, Thin Pat. SST.	1	
20	809017	Lockwasher, #8 (Service Only)	2	C
21	209042	Brass Washer	1	
22	609020	Friction (Disk Spring) Washer	1	
23	059018	Stopnut, 6–32 Thin Pat. SST	2	
24	609015	Nut Block	1	
25	603027	Adapter	2	
26	603031	Special Nut	2	
27	614334	Handle Assembly	1	D E F G
28	609032	Screw, 10–32 x 3/4 Flat Head SST.	2	
29	609011	Screw, 6–32 x 1/8 Round Head SST.	2	E
30	059057	Screw, 4–40 x 1/8 Bind. Head SST	2	
31	609021	Screw, 10–32 x 5/8 Rd Hd.SST.(Service Only)	1	C
32	123421	Label	1	
33	630010	Hinge Block	1	
34	630030	Insert (P. Plate Pivot)	1	
35	609012	LockNut, 4–40 SST.	1	
36	729064	Screw, 8–32 x 3/8 Bd Hd SST.(Service Only)	2	C
36	729064	Screw, 8–32 x 3/8 Bind Head SST.	1	C
37	630017	N.S. Pressure Plate Tab (Service Only)	1	C
38	602026F	Spring	2	C
39	630002	Keeper	1	
40	600022	Connector	1	
41	059012	Screw, 6–32 x 3/8 Fillister Head, SST.	2	
42	151042	Handle Grip	1	C F G H
43	609050	Screw, 6–32 x 3/32 Slotted Rd. Head	5	E

REVISIONS

ECN	REV	DESCRIPTION	DATE	BY
	D	PRIOR ECNS 1014,1078,1136,1184	07/01	MWJ
1207	E	REPLACE 609011 W/ 609050, 604334 W/ 614334	08/01	HM
1231	F	REMOVE HANDLE AND GRIP	10/01	MWJ
1245	G	REVERT BACK TO REV E CONFIG PER TT REQUEST	01/02	HM
1404	H	REPLACE 156042 WITH 151042	04/05	MWJ

	BY	DATE
DRAWN	HM	02/00
CHKD	MWJ	04/05
APPVD		

ALL DIMENSIONS IN INCHES UNLESS OTHERWISE NOTED

TOLERANCES UNLESS NOTED
XX ± 0.010
XXX ± 0.005
ANGLES ± 1/2°

MATERIAL

2" EasyClean Nail Spotter

TapeTech® an AXA enterprise

SIZE	SCALE	DWG NO.	REV
B		63 TT	H

ASSEMBLY REF. NO. | SHEET 1 of 2

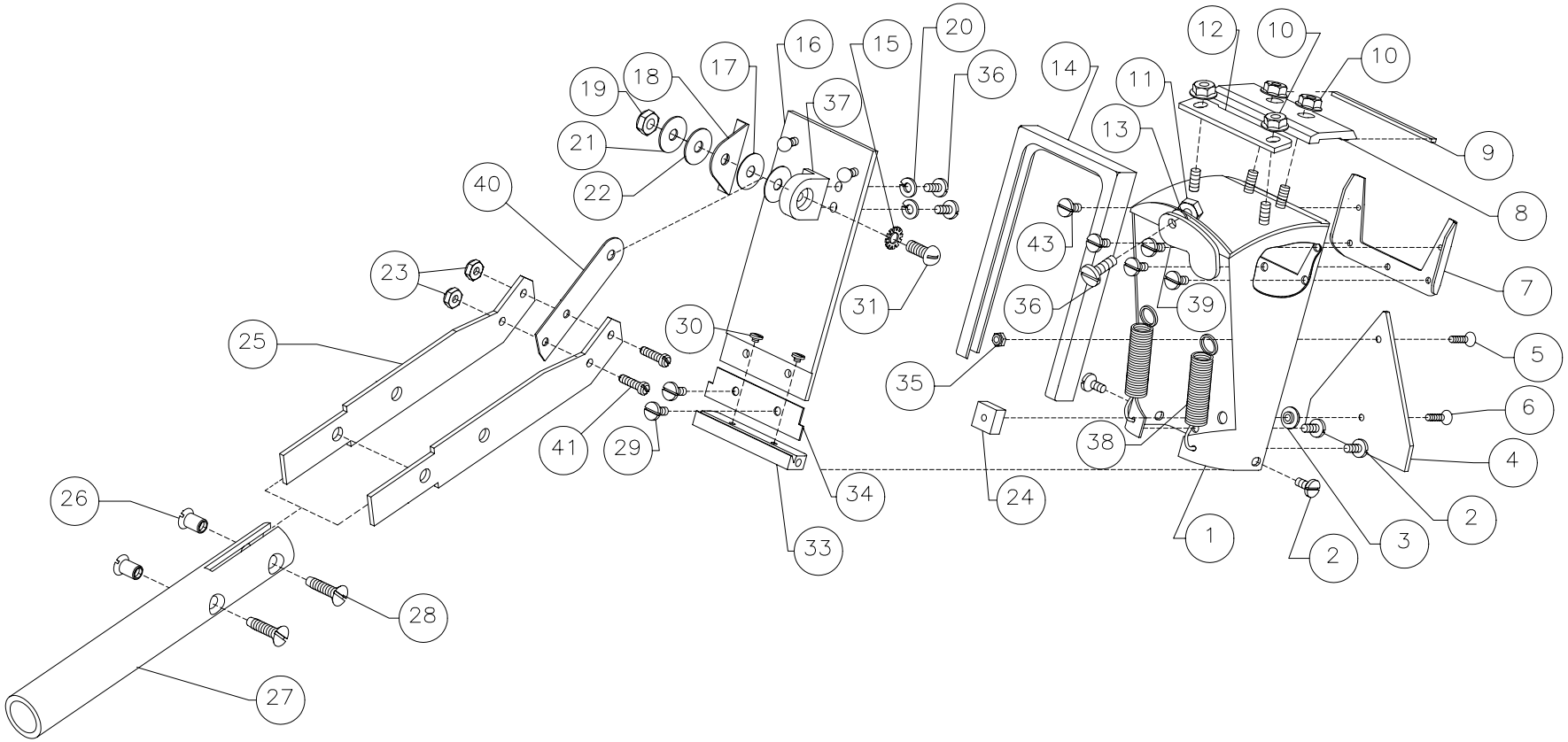

63	2" EZ Clean Nail Spotter
	TapeTech® an AYA enterprise — REV H