| Item No. | Part No. | Description | Qty. | |
|---|---|---|---|---|
| 1 | 688001 | Housing Assy. | 1 | |
| 2 | 359005 | Screw, 6–32 x 1/4 Bind Head SST. | 4 | |
| 3 | 602029F | Special Rivet | 1 | C |
| 4 | 650007 | Skid | 1 | |
| 5 | 609048 | Screw, 4–40 x 3/8 Flat Head SST. | 1 | |
| 6 | 609008 | Screw, 4–40 x 1/2 Flat Head SST. | 1 | |
| 7 | 680009 | Facing | 1 | |
| 8 | 654036 | Blade Clamp Assy. | 1 | |
| 9 | 650005F | Blade | 1 | C |
| 10 | 609049 | Nut, 8–32 Hex Flanged | 5 | B |
| 11 | 609050 | Screw, 6–32 x 3/32 Slotted Rd. Head | 5 | E |
| 12 | 602035 | Adjustable Stop | 1 | |
| 13 | 639020 | Plastic Washer | 1 | |
| 14 | 680015 | Wiper (Viton) | 1 | |
| 15 | 709050 | Ext. Lockwasher, No. 10. (Service Only) | 1 | C |
| 16 | 684028 | Pressure Plate Assembly | 1 | C |
| 17 | 609018 | Plastic Washer | 4 | |
| 18 | 602045F | Special Washer | 1 | |
| 19 | 650040 | Special Washer | 1 | |
| 20 | 059225 | Nut, 10–32, Thin Pat. SST. | 2 | |
| 21 | 209042 | No. 10 Brass Washer | 1 | |
| 22 | 609020 | Friction (Disk Spring) Washer | 1 | |
| 23 | 809017 | Lockwasher, #8 (Service Only) | 2 | C |
| 24 | 729064 | Screw 8–32 x 3/8 Bd Hd (Service Only) | 2 | C |
| 25 | 603027 | N.S. Handle Connector | 2 | |
| 26 | 603031 | Special Nut | 2 | |
| 27 | 614334 | Handle Assembly | 1 | D E F G |
| 28 | 609032 | Screw, 10–32 x 3/4 Flat Head SST. | 2 | |
| 29 | 609011 | Screw, 6–32 x 1/8 Round Head SST. | 3 | E |
| 30 | 059057 | Screw, 4–40 x 1/8 Bind. Head SST | 2 | |
| 31 | 659021 | Screw, 10–32 x 3/4 Rd Hd (Service Only) | 1 | C |
| 32 | 609015 | Nut Block | 1 | |
| 33 | 680010 | Hinge Block | 1 | |
| 34 | 680030 | Insert (P. Plate Pivot) | 1 | |
| 35 | 609012 | LockNut, 4–40 SST. | 1 | |
| 36 | 509008 | Screw, 10–32 x 1/2 Bind Head, SST | 1 | |
| 37 | 630017 | N.S. Pressure Plate Tab (Service Only) | 1 | C |
| 38 | 602026F | Spring | 2 | C |
| 39 | 680002 | Keeper | 1 | |
| 40 | 123421 | Label | 1 | |
| 41 | 650022 | Connector | 2 | |
| 42 | 059018 | Stopnut, 6–32 Thin Pat, SST | 2 | |
| 43 | 059012 | Screw, 6–32 x 5/8 Fillister Head, SST | 2 | |
| 44 | 151042 | Handle Grip | 1 | C F G H |

REVISIONS

| ECN | REV | DESCRIPTION | DATE | BY |
|---|---|---|---|---|
| | D | PRIOR ECNS 1014,1078,1136,1184 | 02/00 | HM |
| 1207 | E | REPLACE 609011 W/ 609050, 604334 W/ 614334 | 08/01 | HM |
| 1231 | F | REMOVE HANDLE AND GRIP | 10/01 | MWJ |
| 1245 | G | REVERT BACK TO REV. E CONFIG. PER TT REQUEST | 01/02 | HM |
| 1404 | H | REPLACE 156042 WITH 151042 | 04/05 | MWJ |

| | BY | DATE |
|---|---|---|
| DRAWN | HM | 02/00 |
| CHKD | MWJ | 04/05 |
| APPVD | | |

ALL DIMENSIONS IN INCHES UNLESS OTHERWISE NOTED

TOLERANCES UNLESS NOTED
XX ± 0.010
XXX ± 0.005
ANGLES ± 1/2°

MATERIAL

# 3" EasyClean Nail Spotter

TapeTech® an AXA enterprise

| SIZE | SCALE | DWG NO. | REV |
|---|---|---|---|
| B | | 68 TT | H |

ASSEMBLY REF. NO.

SHEET 1 of 2

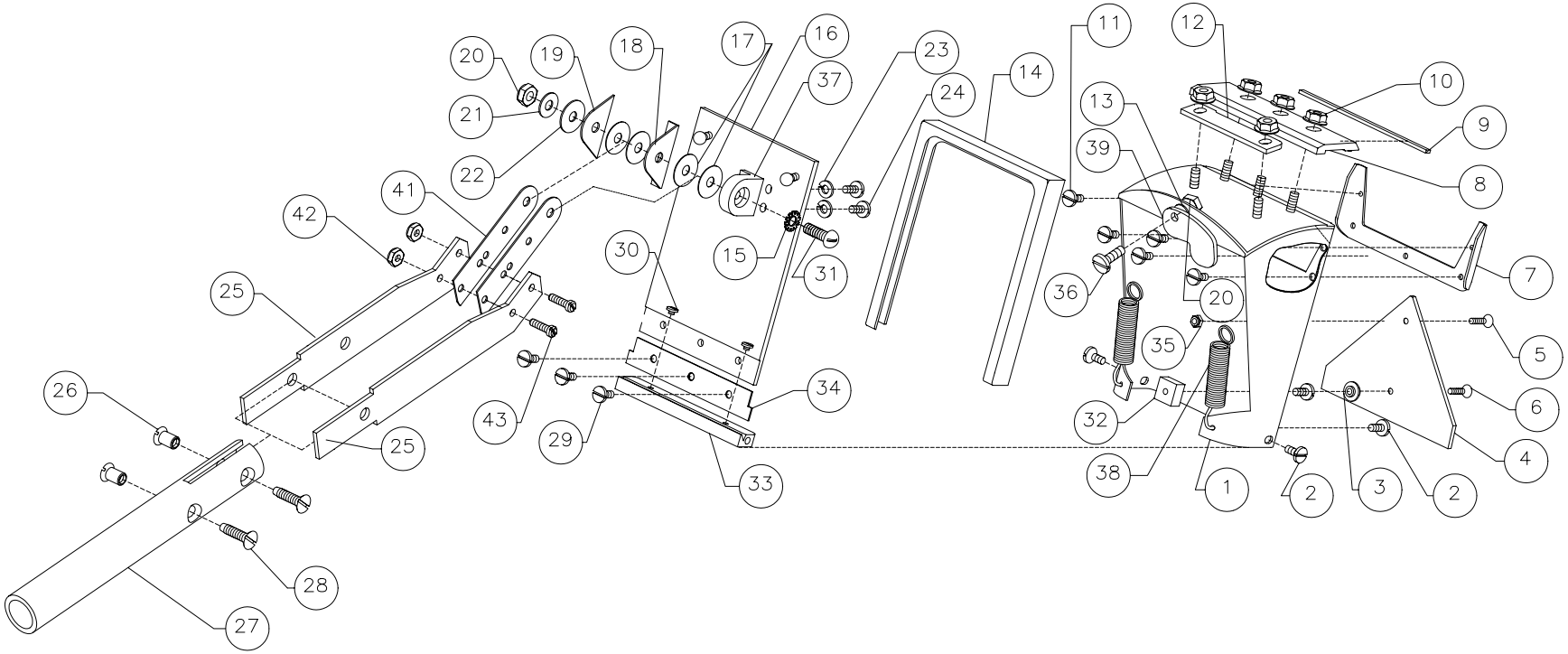


| | | |
|---|---|---|
| 68 | 3" EZClean Nail Spotter | |
| | TapeTech® an AYA enterprise | REV H |